Rack Mounting Kit 12

DISTRIBUIDOR EM PORTUGAL
SISLITE Integração de Sistemas
R. Sá de Figueiredo 6 – C
2790-233 Carnaxide
Telef. (+351) 21 417 76 21 ◆ Fax. (+351) 21 030 00 31
Web: www.sislite.pt - email: geral.sislite@sislite.pt

Main Features

- 19″ EIA rack mounting kit for touchCUE-12-B and uniCUE-12-B
- Full rack width
- Height 6 rack spaces
- Stainless steel front panel

Specifications

Enclosure
Stainless steel, metal
Dimensions
482.6 x 266 x 20 mm / 19″ x 10.5″ x 0.8″
6 rack spaces in height
Weight
2.5 kg / 5.5 lb

Order Information

Product code CS0419

Description

The Rack Mounting Kit 12 is an optional mounting accessory for the built-in touch panel touchCUE-12-B and built-in touch panel controller uniCUE-12-B. It allows secure installation of the device in a 19″ EIA equipment rack. The Rack Mounting Kit 12 occupies 6 rack spaces and Back Box is not necessary. Rack-mounting hardware is not supplied.

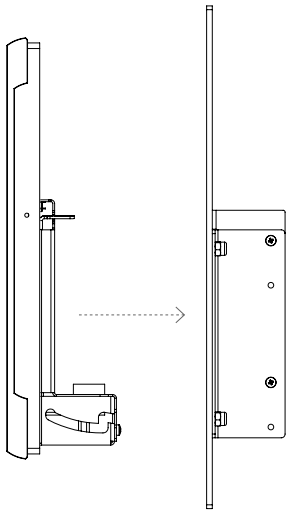

Mechanical

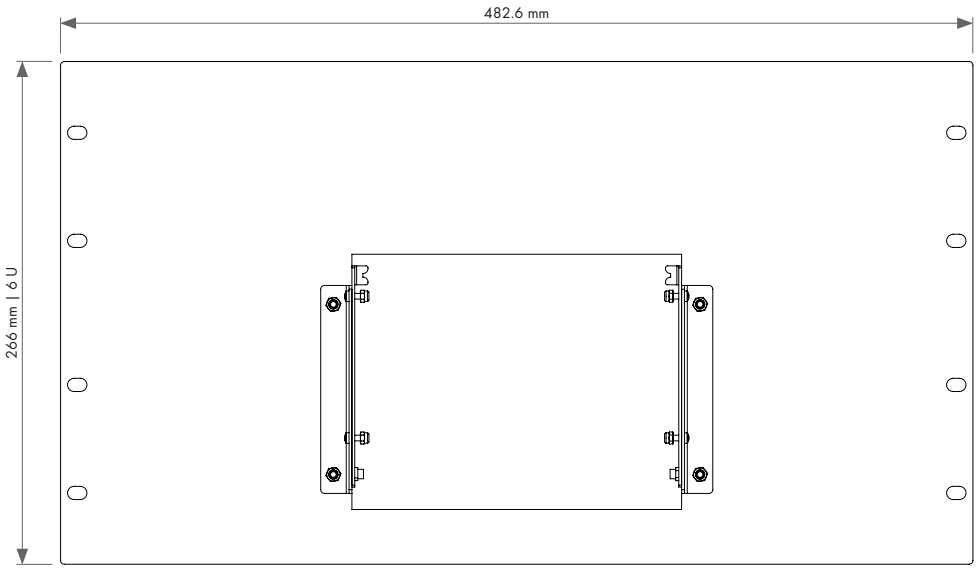

Rear View

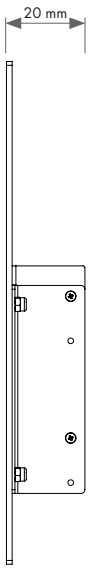

Side View